REV.	ECN NO.	LOCAS.	DESCRIPTION	DATE	DESIGN
A0			RELEASE TO CUSTOMER	080505	HANG

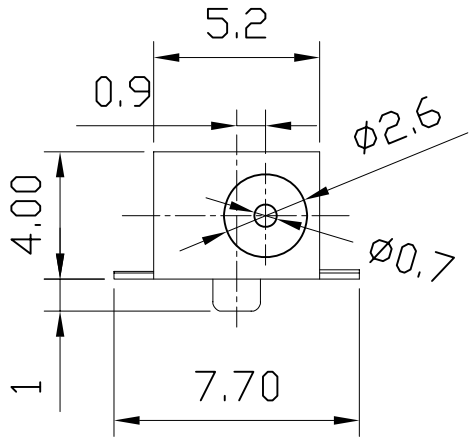

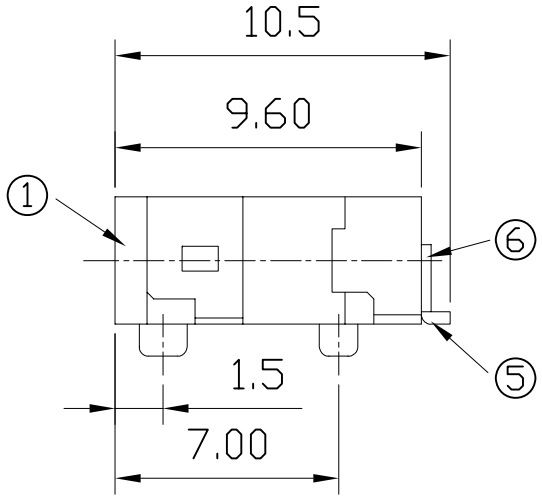

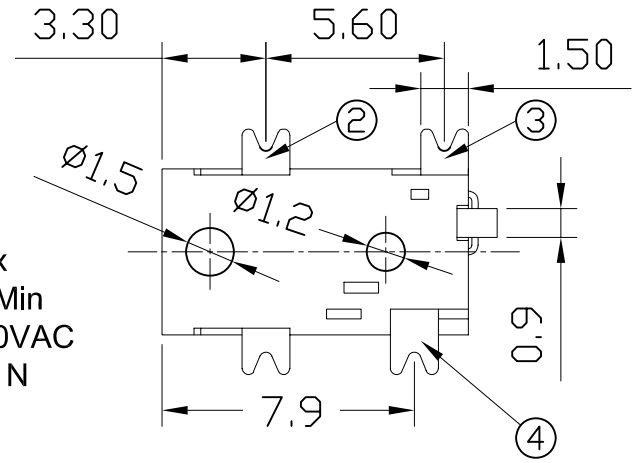

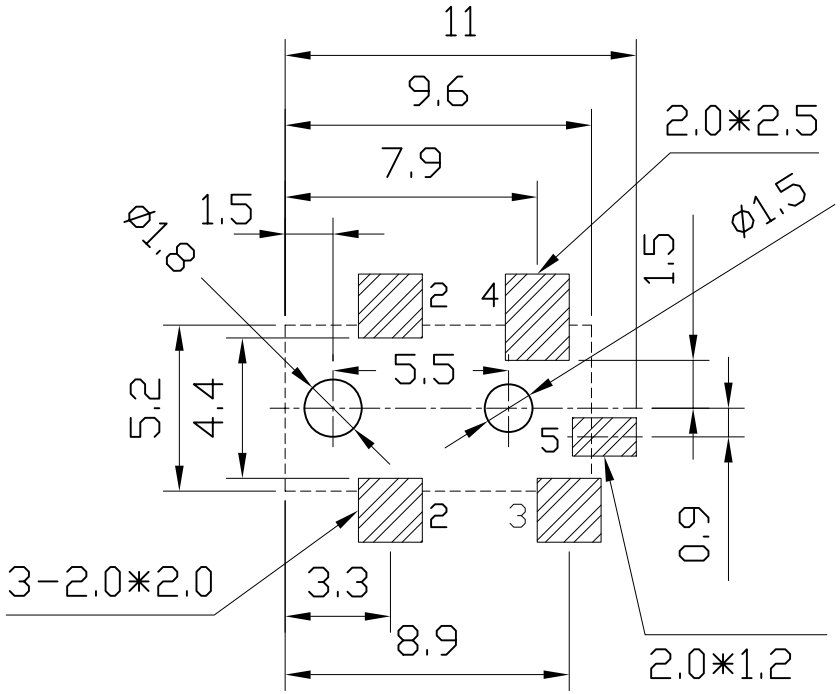

PCB Layout

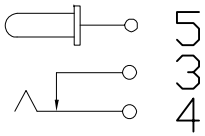

SPECIFICATION

1.Current Rating:0.5Amp
2.Operation Voltage:30V
3.Contact Resistance:30m Ohms Max
4.Insulation Resistance:100M Ohms Min
5.Dielectric Withstanding Voltage: 500VAC
6.Mating and Unmating Force:3 to 20 N
7.Life:5000 Cycles

No.	Description	Material	QTY	Plating
①	Housing	PBT/PA66/PA46	1	
②	Contact Foot	Brass	1	Ag-plated
③	Curve Piece	Brass	1	Ag-plated
④	Spring	Y-Cut	1	Ag-plated
⑤	Pin	Brass	1	Ag-plated
⑥	Curve Piece	Stainless Steel	1	Ag-plated

DIM	TOL	DIM	TOL
X.	±0.25	X°.	±4.0°
X.X	±0.20	X.X°	±3.0°
X.XX	±0.15	X.XX°	±2.0°
X.XXX	±0.10	X.XXX°	±1.0°

THIS DRAWING CONTAINS INFORMATION THAT IS PROVIDED BY LASTAR TECHNOLOGY AND SHOULD NOT BE USED WITHOUT WRITTEN PERMISSION

LASTAR Lastar Technology CO.,LTD

DRAW NO.	090041-07	DATE	DRAW NAME: DC JACK SMT 5Pin
DESIGN	HANG	080505	P/N NO. DC-090041-07 / FILE:
CHECK	WANGCM	080506	MODEL:
APPROVED	HUYX	080506	UNIT: mm / SHEET: N/A / REV. A0 / SCALE N/A